DDA-Y / DDB-Y

Operating Manual | English Reference Edition

English reference translation - 23 September 2026. Prepared from the supplied Chinese 4-page operating manual. Technical diagrams are reproduced from the original; nearby English legends translate their labels. This is not a newly validated specification or certification.

READ BEFORE USE: The source contains inconsistent speed, analog-example and communication descriptions. They are retained and flagged where relevant. Do not use disputed examples, register meanings or adapter pinouts for commissioning until the supplier confirms the ordered hardware and firmware.

Original page 1

Laser Distance Sensor

Operating Manual

• Please confirm that this product meets your requirements.

• Before use, read this manual and operate the product strictly according to the instructions below.

• Read the precautions carefully and use the product only after understanding the relevant information.

User Information

WARNING

Failure to follow the specified operating instructions when using this product may result in personal injury or property damage.

• Before using the instrument, carefully read all operating instructions and safety rules in this manual. Using the instrument in a manner not described in this manual may damage the instrument, affect measurement accuracy, or cause injury to the user or other persons.

• Do not open or repair the instrument yourself in any way. Unauthorized modification or alteration of the laser emitter's performance is strictly prohibited. Store the instrument properly, keep it out of children's reach, and prevent use by unauthorized persons.

• Never direct the instrument's laser at your own or another person's eyes or any other part of the body. Never direct the laser at highly reflective surfaces.

• Electromagnetic emissions from the instrument may interfere with other equipment and devices. Do not use it near aircraft or medical equipment, or in flammable or explosive environments.

• Do not dispose of the instrument with household waste. Dispose of it in accordance with applicable national or local requirements.

• If a product quality issue occurs or you have any questions about using the instrument, contact DAIDISIKE promptly. We will assist you as soon as possible.

1. Checking the Package Contents

Item	Quantity
Sensor main unit	1
M12 8-pin cable, approximately 2 m	1
Operating manual	1
Color-printed box	1
Metal-film resistor	1
Mounting screws	2

2. Product Applications / Operating Panel

This industrial laser sensor provides accurate, stable distance measurement and can be integrated into a variety of industrial applications. A red laser beam is directed at a reflecting surface, and non-contact measurement is performed using the returned signal.

Application examples:

• Industrial measurement of position, displacement, thickness, distance, etc.

• Industrial automation and intelligent production management.

• Measurement for overhead cable installation and railway overhead contact lines.

• Material-level / liquid-level detection.

• Slope and dam deformation monitoring.

• Building safety monitoring.

Measurement illustration labels:

• Measurement reference plane.

• Measurement distance.

Display illustration:

• Example display: station `1`, distance `9.999`, unit `m`.

• 1: Station number.

• 2: Measured distance.

• 3: Distance unit.

Buttons:

Button	Short press	Long press
SET	Confirm in settings mode	Enter parameter settings mode
ESC	Return in settings mode	Set the backlight on/off mode
UP	Adjust the selected option	Move the digit selection forward
DOWN	Adjust the selected option	Move the digit selection backward

UP and DOWN correspond to the upward- and downward-pointing triangle buttons on the instrument. The instrument face also shows SET and ESC.

Specifications

The source specification table is unnumbered. The source proceeds directly from section 2 to section 4.

Parameter	Source specification
Communication interface	RS232 / RS485, selectable
Measurement frequency	1 Hz-40 Hz
Laser type	Class II, 660 +/- 15 nm, <= 1 mW
Measurement resolution	1 mm
Measurement error	+/- (2 mm + d x 0.0001); see Note 1
Indication beam	Red laser
Spot size	At 1 m: diameter 6 mm; at 10 m: diameter 8 mm; at 20 m: diameter 12 mm; at 30 m: diameter 16 mm
Display	128 x 32 dot-matrix display
Backlight off delay	30 minutes; can be set to always on
Operating modes	Measurement off; continuous measurement
Transistor switching outputs	2 channels; must not exceed DC 36 V, 0.5 A; see Note 3
Power supply	DC 15-30 V
Power consumption	< 3.0 W
Protection rating	IP67
Housing material	Die-cast zinc alloy
Operating temperature	-10 to 50 degrees C
Storage temperature and humidity	-20 to 60 degrees C; 20%-85% RH
Overtemperature protection	Measurement switches off when the body temperature exceeds 70 degrees C and resumes when it falls below 70 degrees C
Body dimensions	88.45 x 40 x 59.3 mm, including connector base

Note 1: Applies with **Speed Level** set to 1. d is the actual distance. Measurement error may increase in harsh environments, such as excessively strong sunlight or large fluctuations in ambient temperature. In such conditions, using a target reflector improves performance.

Note 2: Current output and voltage output are mutually exclusive. Only one may be output at a time; they cannot operate simultaneously.

Note 3: Applying external DC voltage or current to the transistor switching outputs above the specified limits may permanently damage the instrument.

Source discrepancy - measurement frequency: This table states 1-40 Hz; section 5.2.2 states approximately 10 Hz at level 1 and 40 Hz at level 5. Both source statements are retained.

4. Installation Dimensions

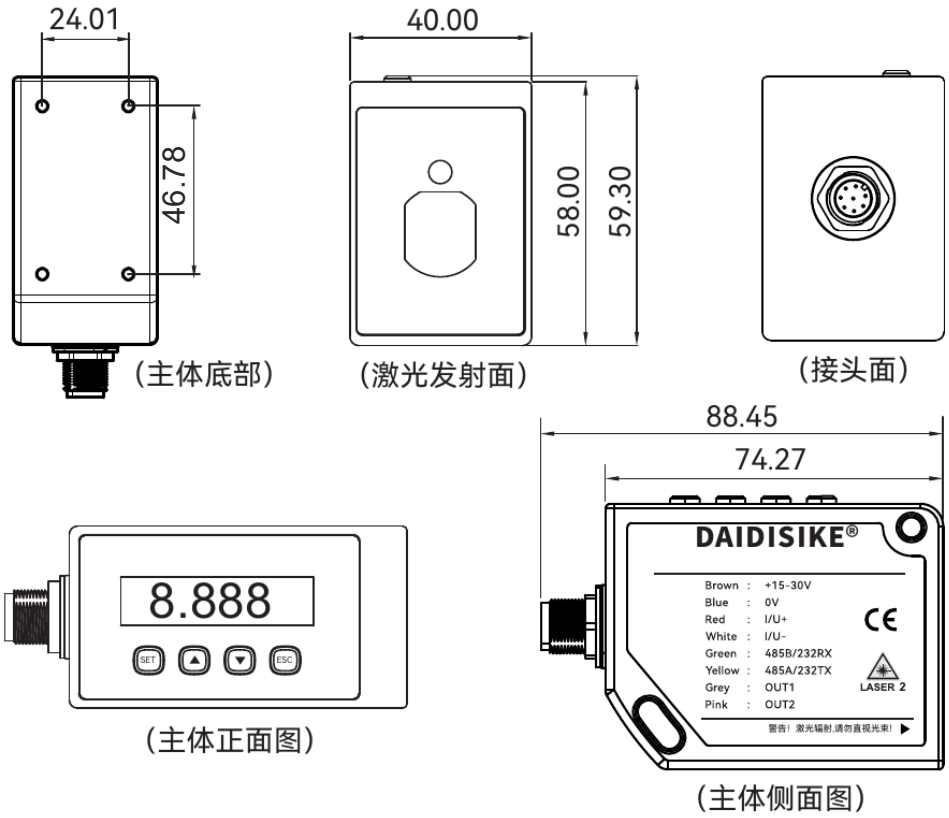

Installation drawing, dimensions in mm. Upper row: bottom view; laser emitting face; connector face. Lower row: front view; side view. The mounting-hole spacing is corrected below; other dimensions and geometry are retained.

All dimensions are in mm. Apart from the mounting-hole correction noted below, the original dimension lines and values are retained. Measurements not labeled on the drawing are not specified.

Confirmed current mounting-hole spacing:
DAIDISIKE confirmed 46.78 mm longitudinal mounting-hole spacing on 23 September 2026. The drawing label and table have been updated; other dimensions and geometry are unchanged. Check the ordered hardware and controlled drawing before machining a bracket; supplied series CAD is a layout reference.

English view caption	Values shown
Main unit - bottom view	24.01; 46.78
Laser emitting face	40.00; 58.00; 59.30
Connector face	No numeric dimension shown
Main unit - front view	Example display 8.888
Main unit - side view	88.45; 74.27

Repeated device-label text, including in the large title illustration and side view:

Color	Label
Brown	+15-30V
Blue	0V

Color	Label
Red	I/U+
White	I/U-
Green	485B/232RX
Yellow	485A/232TX
Grey	OUT1
Pink	OUT2

Other device markings: `DAIDISIKE`, `CE`, `LASER 2`, `NO.10100101` in the large product illustration. The laser warning is: **WARNING! Laser radiation. Do not stare into the beam!** The small source device drawings are illustrations, not a separate compliance claim.

5. Settings Mode

Menu tree, translated in the same order as the source:

```
Miscellaneous settings
  Switching outputs
    OUT1       Positive polarity
    OUT1_L     Low value of the OUT1 switching range
    OUT1_H     High value of the OUT1 switching range
    OUT2       Reverse polarity
    OUT2_L     Low value of the OUT2 switching range
    OUT2_H     High value of the OUT2 switching range
  Speed level
  Restore factory settings
Analog output
  Type
  Lower limit
  Upper limit
Communication settings
  Station number
  Port
  Communication format settings
    Baud rate 9600; data bits 8
    Parity NO; stop bits 1
Factory information
  Product model
  Software version
  Build date
  Instrument temperature
Language selection
  Chinese
  English
```

The source uses several names for the same settings group: "Miscellaneous settings" in the menu tree and "Multiple settings" in section 5.2. It also alternates "Factory information" and "Product information." These terms refer to the same settings groups; these are not additional menu levels.

Original page 2

5.1 Settings Menu

The settings menu includes Multiple settings, Analog output, Communication settings, Factory information, and Language settings.

Example menu display:

```
Menu
  Multiple settings
  Analog output
  Communication settings
  Factory information
  Language settings
```

1. Short-press UP to select the previous option.
2. Short-press DOWN to select the next option.
3. Short-press SET to enter the selected menu item.
4. Short-press ESC to return to the previous screen.

Note: The analog output function is available only on the B version.

5.2 Multiple Settings

Select **Multiple settings** in the menu; refer to section 5.1, Settings Menu.

Example display:

```
Miscellaneous settings
  Switching outputs
  Speed level 5
  Restore factory settings
```

1. Short-press UP to select the previous option.
2. Short-press DOWN to select the next option.
3. Short-press SET to enter/select the chosen menu item.
4. Short-press ESC to return to the previous screen.

5.2.1 Switching Outputs

Enter **Switching outputs** under Multiple settings; refer to section 5.2.

Example display:

Switching output item	Value displayed in the source example
OUT1	N normally open
OUT1_L	01000
OUT1_H	02000
OUT2	NPN
OUT2_L	01000
OUT2_H	02000

Output state options: **Off / Normally open / Normally closed**.

1. Short-press UP to move up through the options / adjust the selected value upward.
2. Short-press DOWN to move down through the options / adjust the selected value downward.
3. Short-press SET to select/deselect the chosen menu item.
4. Short-press ESC to return to the previous screen / cancel the selected menu item.

5. Long-press UP to switch to the preceding digit of the selected value.

6. Long-press DOWN to switch to the following digit of the selected value.

5.2.2 Speed Level

Enter **Speed level** under Multiple settings; refer to section 5.2.

The instrument offers five speed levels, from 1 to 5. Level 1 is the slowest, with an output rate of approximately 10 Hz. Level 5 is the fastest, approximately 40 Hz. Distance measurement accuracy decreases as speed increases. Select a level to suit the actual application.

Source discrepancy - measurement frequency: The specification table on source page 1 states 1-40 Hz. The source does not explain the difference between that lower limit and the approximately 10 Hz stated here.

Example display: Miscellaneous settings / Switching outputs / **Speed level 5** / Restore factory settings.

1. Short-press UP or DOWN to adjust the speed level.

2. Short-press SET or ESC to return to the previous screen.

5.2.3 Restore Factory Settings

Enter **Restore factory settings** under Multiple settings; refer to section 5.2. This restores the settings used when the instrument left the factory.

Dialog text:

```
Restore factory settings
Confirm restore?
```

1. Short-press SET to confirm restoration of factory settings.

2. Short-press ESC to cancel and return to the previous screen.

5.3 Analog Output

Enter **Analog output** in the settings menu. Available only on the DB series, as stated in the source. Refer to section 5.1.

Source naming variation: The manual alternates "B version" and "DB series" for analog-output availability. Its filename identifies DDA-Y / DDB-Y. The precise equivalence of these labels is not separately established in the source.

Example display:

```
Analog output
  Type        No-Out
  Lower limit 00000
  Upper limit 10000
```

1. Short-press UP to move up through the options / adjust the selected value upward.

2. Short-press DOWN to move down through the options / adjust the selected value downward.

3. Short-press SET to select/deselect the chosen menu item.

4. Short-press ESC to cancel the selected menu item.

5. Long-press UP to switch to the preceding digit of the selected value.

6. Long-press DOWN to switch to the following digit of the selected value.

Output mode options: **No-Out / 0-5 V / 0-10 V / 4-20 mA / 0-20 mA / 0-24 mA**.

5.4 Communication Settings

Select **Communication settings** in the menu; refer to section 5.1.

Example display:

```
Communication settings
  Station number 01
  Port           RS485
  Communication format settings
```

1. Short-press UP to select the previous option.
2. Short-press DOWN to select the next option.
3. Short-press SET to enter/select the chosen menu item.
4. Short-press ESC to return to the previous screen / cancel the selection.

5.4.1 Station Number

Select **Station number** in Communication settings; refer to section 5.4.

Example display: Station number `01`; port `RS485`.

1. Short-press UP to increase the station number.
2. Short-press DOWN to decrease the station number.
3. Short-press SET to confirm the selected menu item.
4. Short-press ESC to cancel the selected menu item.

5.4.2 Port

Enter **Port** in Communication settings; refer to section 5.4.

Example display: Station number `01`; port `RS485`.

1. Short-press UP to select the previous option.
2. Short-press DOWN to select the next option.
3. Short-press SET to enter/select the chosen menu item.
4. Short-press ESC to return to the previous screen / cancel the selection.

5.4.3 Communication Format Settings

Enter **Communication format settings** in Communication settings; refer to section 5.4. Four options are provided: **B** (baud rate), **D** (data bits), **P** (parity), and **S** (stop bits).

Source example display:

```
Communication function
  B 9600    D 8
  P Even    S 1
```

1. Short-press UP to move up through the options / adjust the selected value upward.
2. Short-press DOWN to move down through the options / adjust the selected value downward.
3. Short-press SET to select/deselect the chosen menu item.
4. Short-press ESC to cancel the selected menu item.

Available values:

Setting	Options
D - data bits	8 / 9

Setting	Options
S - stop bits	1 / 1.5 / 2
P - parity	Even / Odd / None
B - baud rate	1200 / 2400 / 4800 / 9600 / 19200 / 38400 / 57600 / 115200

5.5 Product Information

Enter **Product information** in the settings menu; refer to section 5.1. The product model, software version, build date, and instrument temperature are shown in a scrolling display.

Source example:

Product information	Example value
Product model	20m_B
Software version	V.1.20
Build date	20230601
Instrument temperature	38 degrees C

Short-press ESC to return to the previous screen.

5.6 Language Settings

Enter **Language settings** in the settings menu; refer to section 5.1.

Options: **Chinese / English**.

1. Short-press UP to move up through the options.
2. Short-press DOWN to move down through the options.
3. Short-press SET to confirm the selected menu item.
4. Short-press ESC to return to the previous screen.

5.7 Backlight Mode Settings

The backlight has two modes:

1. Automatically turns off after 30 minutes. Press any key to turn the backlight on automatically.
2. Always on.

While the instrument is measuring, press and hold ESC for approximately 3 seconds to switch between the two modes.

Display indications:

• **Auto OFF**: The display backlight automatically switches off after 30 minutes.

• **ON**: The display backlight remains on.

6. Main Unit Wiring and Networking

Pin number	Wire color	Interface definition	Interface description
2	Brown	+15-30V	External DC 15-30 V supply positive, input
7	Blue	0V	Supply negative, input
8	Red	I/U+, B version only	Analog output positive: 4-20 mA / 0-20 mA / 0-24 mA; 0-5 V / 0-10 V
1	White	I/U-, B version only	Dedicated ground for voltage/current output
3	Green	RS232RX / RS485-B	RS232 or RS485 communication line
4	Yellow	RS232TX / RS485-A	RS232 or RS485 communication line
5	Grey	OUT1	Switching output 1
6	Pink	OUT2	Switching output 2
Shield	Cable shield	EARTH	Earth connection

6.1 Current Output (DB Series Only)

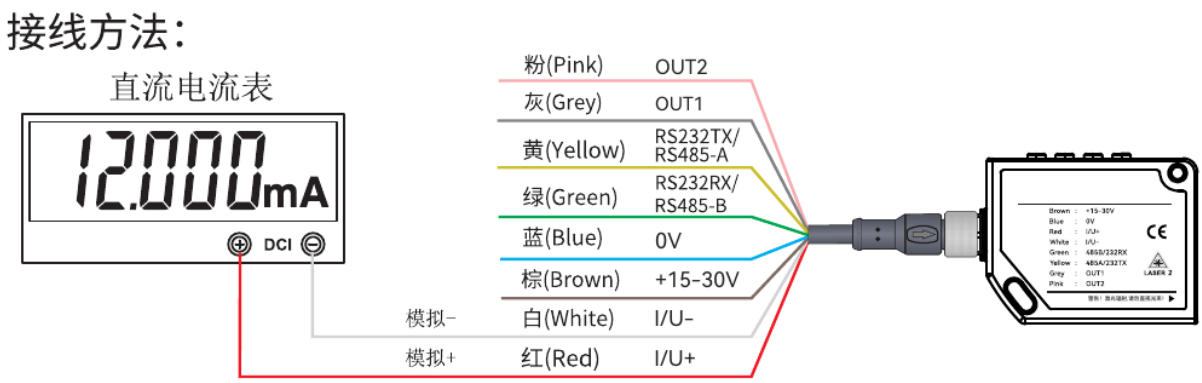

Source current-output wiring. DC ammeter example: 12.000 mA. Analog + = Red I/U+; Analog - = White I/U-. Other wire colors: Pink OUT2, Grey OUT1, Yellow RS232TX/RS485-A, Green RS232RX/RS485-B, Blue 0V, Brown +15-30V. Current and voltage outputs cannot operate simultaneously.

Note: Current output and voltage output are mutually exclusive. Only one may be output at a time; they cannot operate simultaneously.

Wiring diagram:

- DC ammeter display example: **12.000 mA**.
- Red `I/U+` to the ammeter's analog positive terminal.
- White `I/U-` to the ammeter's analog negative terminal.
- Other diagram labels: Pink `OUT2`; Grey `OUT1`; Yellow `RS232TX / RS485-A`; Green `RS232RX / RS485-B`; Blue `0V`; Brown `+15-30V`.
- Diagram terminal labels: **Analog -** and **Analog +**.

Original page 3

6.1 Current Output - continued

Analog current output formula:

```
Iout = ((Imax - Imin) x (D - Dmin)) / (Dmax - Dmin) + Imin
```

Where:

- `Iout` is the output current.
- `Imax` is the maximum value of the output current range.
- `Imin` is the minimum value of the output current range.
- `D` is the current measured distance.
- `Dmin` is the minimum distance used for analog output, configured as **Lower limit** in section 5.3.
- `Dmax` is the maximum distance used for analog output, configured as **Upper limit** in section 5.3.

6.2 Voltage Output (DB Series Only)

Source voltage-output wiring. DC voltmeter example: 2.0000 V. Analog + = Red I/U+; Analog - = White I/U-. Other wire colors: Pink OUT2, Grey OUT1, Yellow RS232TX/RS485-A, Green RS232RX/RS485-B, Blue 0V, Brown +15-30V. Current and voltage outputs cannot operate simultaneously.

Note: Current output and voltage output are mutually exclusive. Only one may be output at a time; they cannot operate simultaneously.

Wiring diagram:

- DC voltmeter display example: **2.0000 V**.
- Red `I/U+` to the voltmeter's analog positive terminal.
- White `I/U-` to the voltmeter's analog negative terminal.
- Other diagram labels: Pink `OUT2`; Grey `OUT1`; Yellow `RS232TX / RS485-A`; Green `RS232RX / RS485-B`; Blue `0V`; Brown `+15-30V`.
- Diagram terminal labels: **Analog -** and **Analog +**.

Current-output example printed here in the source:

The operating mode is 4-20 mA output (`Imax = 20`, `Imin = 4`). The maximum distance **Upper limit**, `0x1B`, is `5000 mm`; the minimum distance **Lower limit**, `0x1A`, is `0 mm`. The current measured distance is `3000 mm`. The source then prints this calculation:

```
Iout = ((20 - 4) x (4000 - 0)) / (6000 - 0) + 4 = 14.666 mA
```

Source inconsistency: The values in the example's prose (`5000 mm`, `3000 mm`) do not match the values substituted in the printed equation (`6000 mm`, `4000 mm`). Both are reproduced above without choosing one as authoritative.

Analog voltage output formula, exactly as printed:

```
Uout = ((Umax - Umin) x (D - Dmin)) / (Dmax - Dmin)
```

Where:

- `Uout` is the output voltage.
- `Umax` is the maximum value of the output voltage range.
- `Umin` is the minimum value of the output voltage range.
- `D` is the current measured distance.
- `Dmin` is the minimum distance used for analog output, configured as **Lower limit** in section 5.3.
- `Dmax` is the maximum distance used for analog output, configured as **Upper limit** in section 5.3.

Voltage-output example:

The operating mode is 0-10 V output. The maximum distance **Upper limit**, `0x1B`, is `6000 mm`; the minimum distance **Lower limit**, `0x1A`, is `0 mm`. The current measured distance is `4000 mm`. Calculation:

```
Uout = ((10 - 0) x (4000 - 0)) / (6000 - 0) = 6.666 V
```

The general voltage formula in the source omits a `+ Umin` term. Its available voltage modes start at 0 V. The translation retains the printed formula and does not generalize it to other output ranges.

6.3 Transistor Switching Outputs

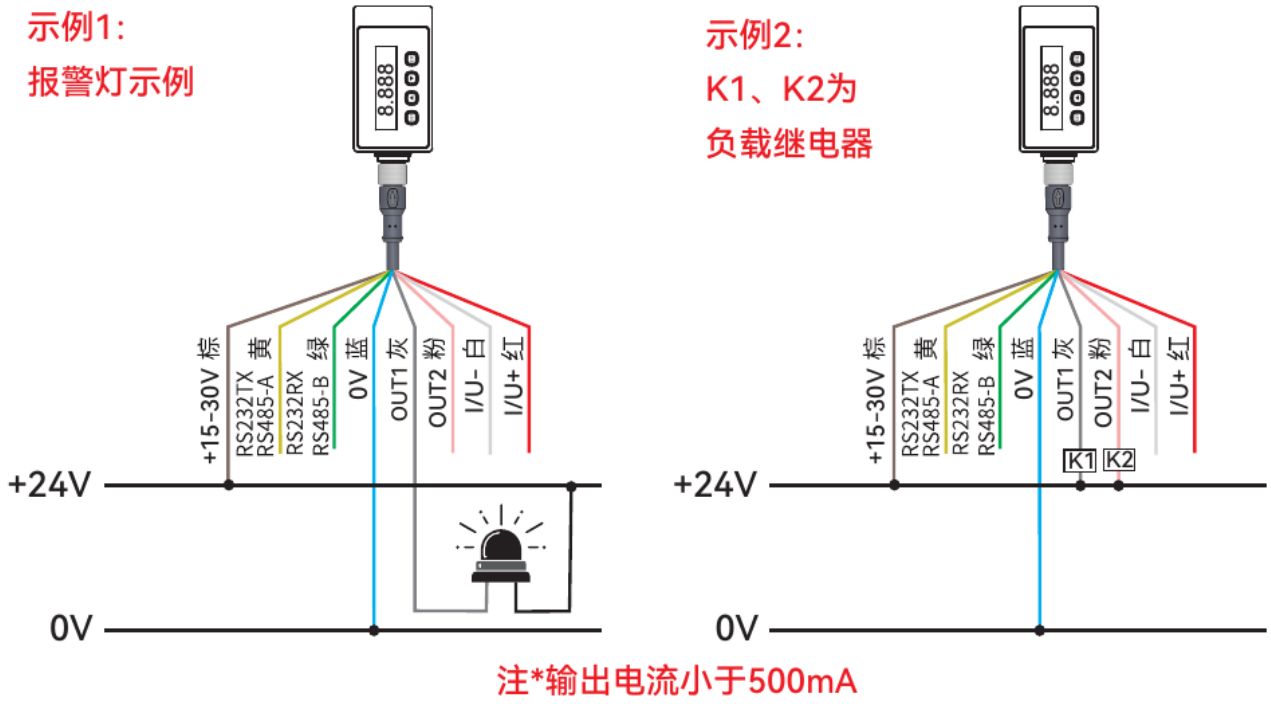

Source NPN circuits. Left: Example 1, alarm light. Right: Example 2, K1 and K2 are load relays. Supply: +24V / 0V. Source note: output current <500 mA. Wire colors from left to right in each drawing: Brown, Yellow, Green, Blue, Grey, Pink, White, Red. Preserve the manufacturer's illustrated connections.

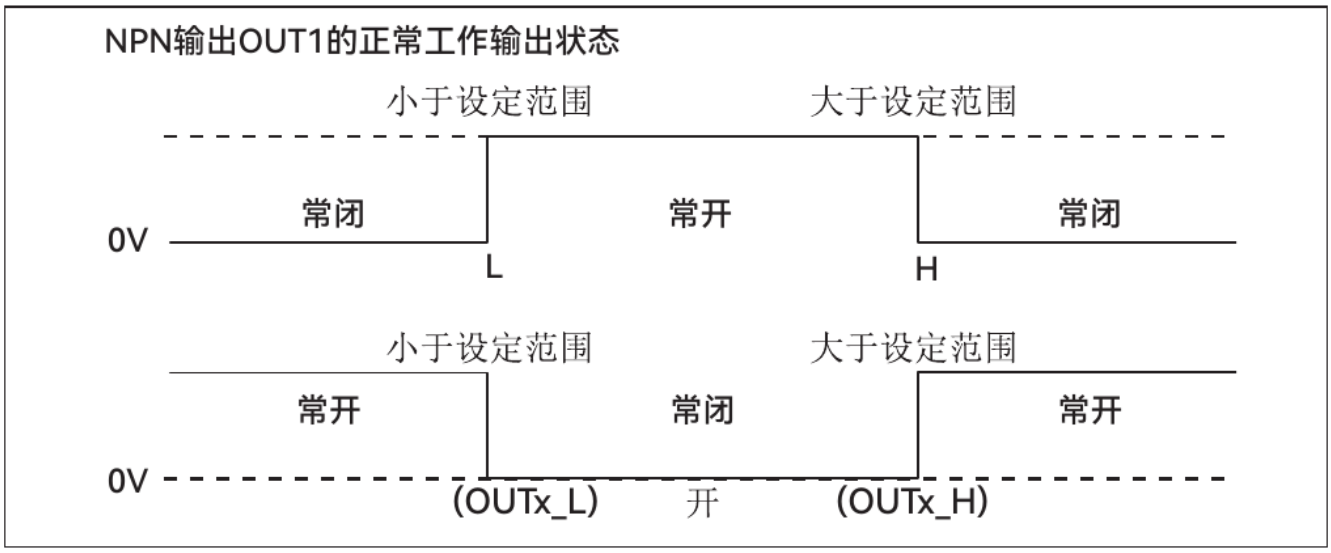

注*当正常工作时，OUT1或OUT2设置为常闭，L-H区间一直保持NPN输出，其他区域处于断开状态；当OUT1或OUT2设置为常开时，L-H区间一直保持断开，其他区域保持NPN输出。

Source OUT1 NPN state diagrams. Left/right zones mean below/above the set range. Upper graph labels: normally closed / normally open / normally closed. Lower graph: normally open / normally closed / normally open. The red note states that the normally closed setting is active within L-H and open outside; normally open is open within L-H and active outside. Equality at thresholds and polarity-code mapping are not defined by the source.

The instrument uses an internal open-drain (open-collector) output for this function. It accepts DC current only and cannot directly supply output voltage or current. Observe the stated sink-output limit of **DC 36 V, 0.5 A**.

The source circuit diagrams show connection of external loads and warning lights:

• **Example 1: Alarm light.** Source drawing shows an external +24 V / 0 V supply and an alarm light connected between the positive supply and a switching output.

• **Example 2: K1 and K2 are load relays.** Source drawing shows an external +24 V / 0 V supply and relays K1/K2 connected to OUT1/OUT2.

• **Note: Output current must be less than 500 mA.**

Source wording - output limit: The specification table says not to exceed 0.5 A, while this diagram note says less than 500 mA. The more permissive boundary must not be inferred from this translation.

Repeated wire labels in both diagrams, from left to right: Brown `+15-30V`; Yellow `RS232TX / RS485-A`; Green `RS232RX / RS485-B`; Blue `0V`; Grey `OUT1`; Pink `OUT2`; White `I/U-`; Red `I/U+`.

The output type is NPN. Normally open and normally closed modes can be selected.

Source clarification - polarity labels: The menu tree and register table use "positive polarity" and "reverse polarity," while this section uses "normally open" and "normally closed." The source does not explicitly map the register polarity codes to the NO/NC terms. The behavior below is translated as the manufacturer states it.

OUT1 NPN output state during normal operation

Source graph labels:

• Below the set range.

• Above the set range.

• `0V`.

• `L`, `H`.

• `(OUTx_L)`, `(OUTx_H)`.

• Normally closed / Normally open / Normally closed, shown on the upper graph.

• Normally open / Normally closed / Normally open, shown on the lower graph.

• The isolated Chinese label beneath the lower graph means "Open" as printed; its intended relationship to the plotted states is not specified.

The source's explanatory note states:

During normal operation, when OUT1 or OUT2 is set to **normally closed**, the NPN output remains active within the L-H interval and is open outside that interval. When OUT1 or OUT2 is set to **normally open**, the output remains open within the L-H interval and the NPN output remains active outside it.

Example:

Set OUT1 to **NPN normally closed**, with `OUT1_L = 2000 mm` and `OUT1_H = 3000 mm`. When the measured distance is below 2000 mm, OUT1 NPN does not output. When the measured distance is between 2000 mm and 3000 mm, the NPN output is active. When the measured distance exceeds 3000 mm, OUT1 does not output.

The source prints the threshold names as `QUT1_L` and `QUT1_H` in this example; the same parameters are labeled `OUT1_L` and `OUT1_H` elsewhere. The example does not explicitly define behavior exactly at the threshold values.

6.4 RS232 Wiring

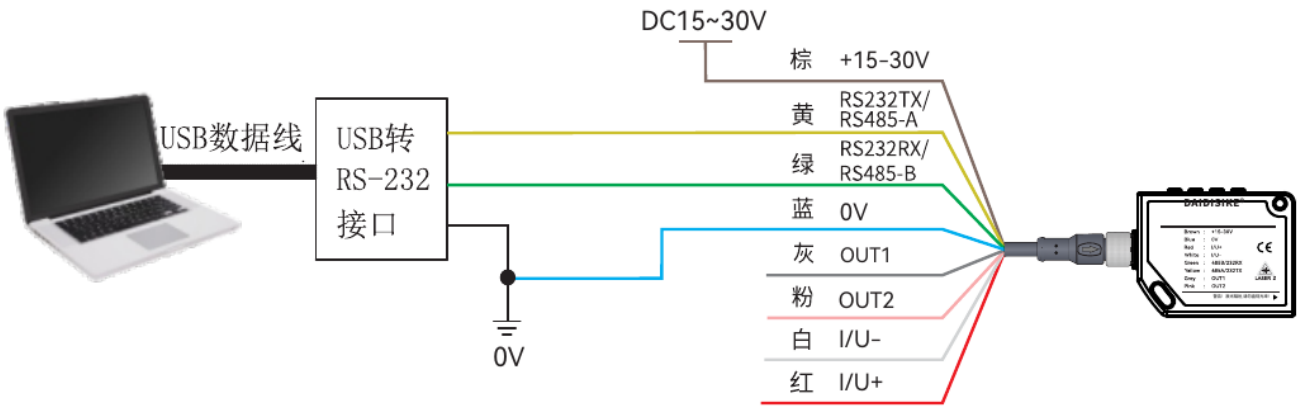

Source RS232 wiring: USB data cable and USB-to-RS232 interface. Cross-connect computer/instrument RXD and TXD. RX = green; TX = yellow; GND = blue. Brown +15-30V; Blue 0V; Grey OUT1; Pink OUT2; White I/U-; Red I/U+. The source connection geometry is retained.

Source diagram labels and connections:

- Computer.
- USB data cable.
- USB-to-RS232 interface.
- DC 15-30 V supply.
- Brown `+15-30V` to supply positive.
- Blue `0V` to supply/common ground, shown as `0V`.
- Yellow `RS232TX` / `RS485-A` to the USB-to-RS232 interface.
- Green `RS232RX` / `RS485-B` to the USB-to-RS232 interface.
- Other wire labels: Grey `OUT1`; Pink `OUT2`; White `I/U-`; Red `I/U+`.

Note: Cross-connect RXD and TXD between the computer and the instrument. RS232 uses three wires: **RX (green), TX (yellow), and GND (blue)**.

6.5 RS485 Wiring

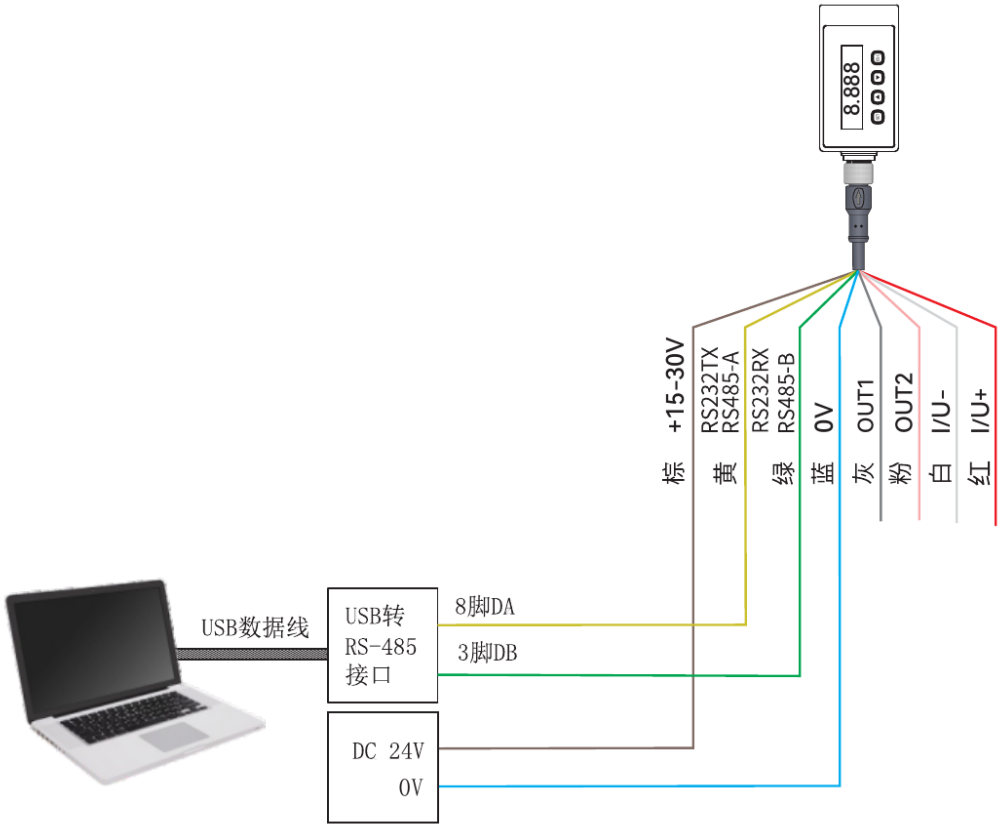

Source RS485 wiring with 24V supply. USB data cable; USB-to-RS485 interface. The illustrated converter labels pin 8 as A and pin 3 as B; these are not the sensor's M12 pin numbers. Yellow = RS485-A; Green = RS485-B; Brown = +15-30V; Blue = 0V; Grey = OUT1; Pink = OUT2; White = I/U-; Red = I/U+.

Note: The instrument in the diagram is powered from **24 V**.

Diagram labels and connections:

- Computer.
- USB data cable.
- USB-to-RS485 interface.
- Converter terminal **pin 8, A**, connected to yellow `RS232TX / RS485-A`.
- Converter terminal **pin 3, B**, connected to green `RS232RX / RS485-B`.
- Converter/supply **DC 24 V**, connected to brown `+15-30V`.
- Converter/supply **0 V**, connected to blue `0V`.
- Remaining sensor wires: Grey `OUT1`; Pink `OUT2`; White `I/U-`; Red `I/U+`.

The converter's pin-8/pin-3 labels belong to the illustrated converter; they do not replace the sensor's pin assignments in section 6.

6.6 RS485 Network Wiring

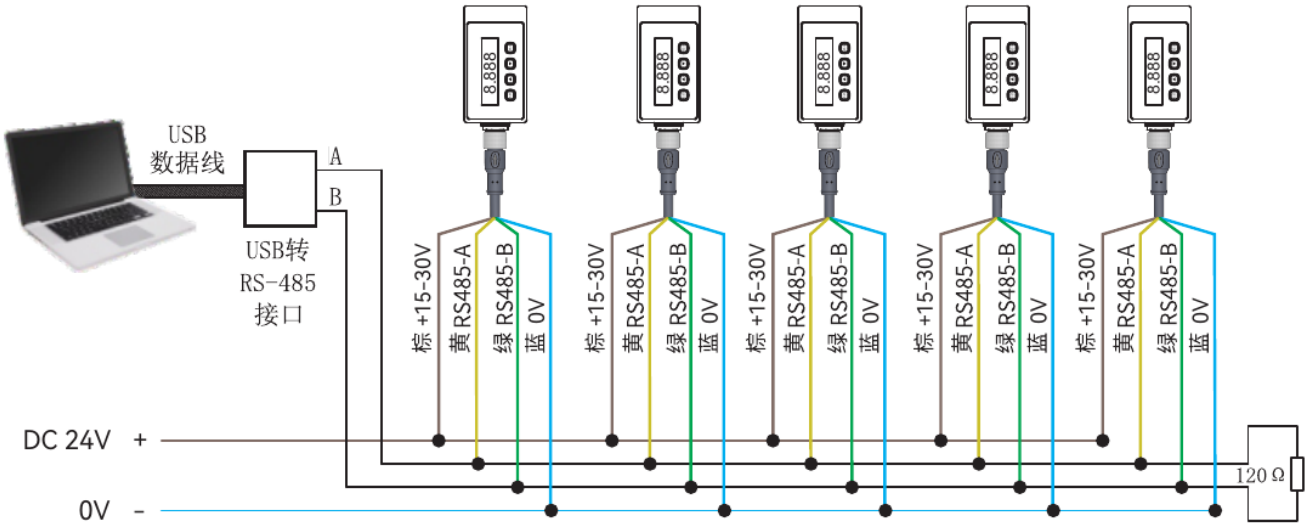

Source half-duplex RS485 bus: USB data cable, USB-to-RS485 interface, A/B bus, DC 24V and 0V rails. At each sensor: Brown +15-30V, Yellow RS485-A, Green RS485-B, Blue 0V. The source states up to 64 instruments. The drawing labels 120 ohms; its text specifies 120 ohms / 8 W, retained without independent validation.

The example below shows a computer connected to multiple instruments using half-duplex RS485 communication. All instruments connect in parallel to the bus. The source states that the address limit allows a maximum of **64 instruments**.

Note: If communication is unstable in an actual application, connect a **120 ohm / 8 W resistor** in parallel at the RS485 termination.

Source specification retained: The text explicitly states 8 W; the drawing labels only 120 ohm. The 8 W value has not been independently validated in this translation.

Diagram labels:

- USB data cable.
- USB-to-RS485 interface.
- `A, B`.
- `DC 24 V +`.
- `0 V -`.
- Terminating resistor: `120 ohm`.
- At each sensor: Brown `+15-30V`; Yellow `RS485-A`; Green `RS485-B`; Blue `0V`.

7. Settings Mode

This heading repeats "Settings Mode" in the source, although the following content describes communication.

7.1 Data Transmission Format

Default format: **baud rate 9600; data bits 8; stop bits 1; parity N**.

Baud rate, data bits, stop bits, parity, and related parameters can be configured in **Communication format settings**.

The source cites section **5.2.3** here. The actual communication-format section in the same manual is **5.4.3**; 5.2.3 describes restoring factory settings.

Original page 4

7.2 RS485 Interface

When instruments are networked over RS485, each instrument (slave device) must have a unique address.

The instrument does not automatically transmit measured data on this interface. The host must send a command to retrieve the data.

Command, reproduced exactly	Description
`010600110000D9CF`	Instrument off
`010600110002580E`	Continuous measurement
`010300150002D5CF`	Retrieve distance data

Example command breakdown:

```
01 03 0015 0002 D5CF
 1  2    3    4    5
```

1. Slave address / station number.
2. Read function code.
3. Starting read address.
4. Quantity to read: two 16-bit values.
5. Check code.

The source description of the first command says "Instrument off"; register 0x11 describes value 0 as "Measurement off." Do not imply that the command disconnects supply power.

7.3 RS232 Interface

When the instrument obtains a measurement, this interface automatically uploads the data in the following format:

```
01  03  04  00 01 0D 7E  2F 43
 1   2   3       4          5
```

1. `01` indicates slave address 1. The system uses addresses 1-64 only; other addresses are reserved.
2. `03` is the read function code, indicating that the data register is read.
3. `04` indicates that four bytes of data are returned.
4. The distance is `0x00010d7e` (hexadecimal) = `68990` (decimal), representing a measured distance of `6.8990 m`.
5. Error-check field: this field allows the host and terminal to detect transmission errors. It occupies two bytes.

The source's byte sequence, hex value, decimal value, distance, and final check bytes are retained exactly. No additional unit conversion or CRC convention is asserted beyond the source.

Source clarification - scale and resolution: The example's raw value and stated distance imply a different numerical increment from the 1 mm resolution listed in the specification table. The source does not explain the distinction; the translation preserves both without redefining measurement resolution.

7.4 Function Register List (16-bit Width)

Hex address	Decimal address	Access	Value range	Function description
0x10	16	R/W, reserved	-	Reserved
0x11	17	R/W	0-2	0: measurement off; 2: continuous measurement
0x12	18	R/W	1-5	Distance measurement speed level: 1 is slowest; 5 is fastest
0x13	19	R/W, reserved	-	Reserved
0x14	20	R/W	1-64	Slave station number
0x15	21	R	-	Distance register, high byte (source wording)
0x16	22	R	-	Distance register, low byte (source wording)
0x17	23	R	-	Distance measurement status register; see note below
0x18	24	R/W	0-7	Communication baud rate
0x19	25	R/W	0-4	Voltage output: 0 = 0-5 V, 1 = 0-10 V; current output: 2 = 4-20 mA, 3 = 0-20 mA, 4 = 0-24 mA
0x1A	26	R/W	0-50000	Analog output minimum value register
0x1B	27	R/W	0-50000	Analog output maximum value register
0x1C	28	R/W	0-50000	Q1 switching output minimum distance
0x1D	29	R/W	0-50000	Q1 switching output maximum distance
0x1E	30	R/W	0-2	Q1: 0 = off; 1 = positive polarity; 2 = reverse polarity
0x1F	31	R/W	0-50000	Q2 switching output minimum distance
0x20	32	R/W	0-50000	Q2 switching output maximum distance
0x21	33	R/W	0-2	Q2: 0 = off; 1 = positive polarity; 2 = reverse polarity

Note for the measurement status register: A value of `0` indicates successful distance measurement. A nonzero value indicates a measurement error, and the distance registers `(21, 22)` have the value `9999999`.

The source labels 0x15/0x16 "high byte"/"low byte" although the table heading specifies 16-bit registers. It does not state the baud-rate code mapping for 0x18, the behavior of value 1 in 0x11, or a numeric code for `No-Out` in 0x19. These details require confirmation from the supplier before commissioning.

Source record

Supplied Chinese operating manual, 4 pages. Original source file retained unchanged. Translation does not merge specifications from other documents.

SHA-256: 1433ee99f3e80eef8235da050aa4c83408867c184600d5fa02655b0d8361c30c